Current part is item (21) on diagram. Available at www.oshkoshequipment.com

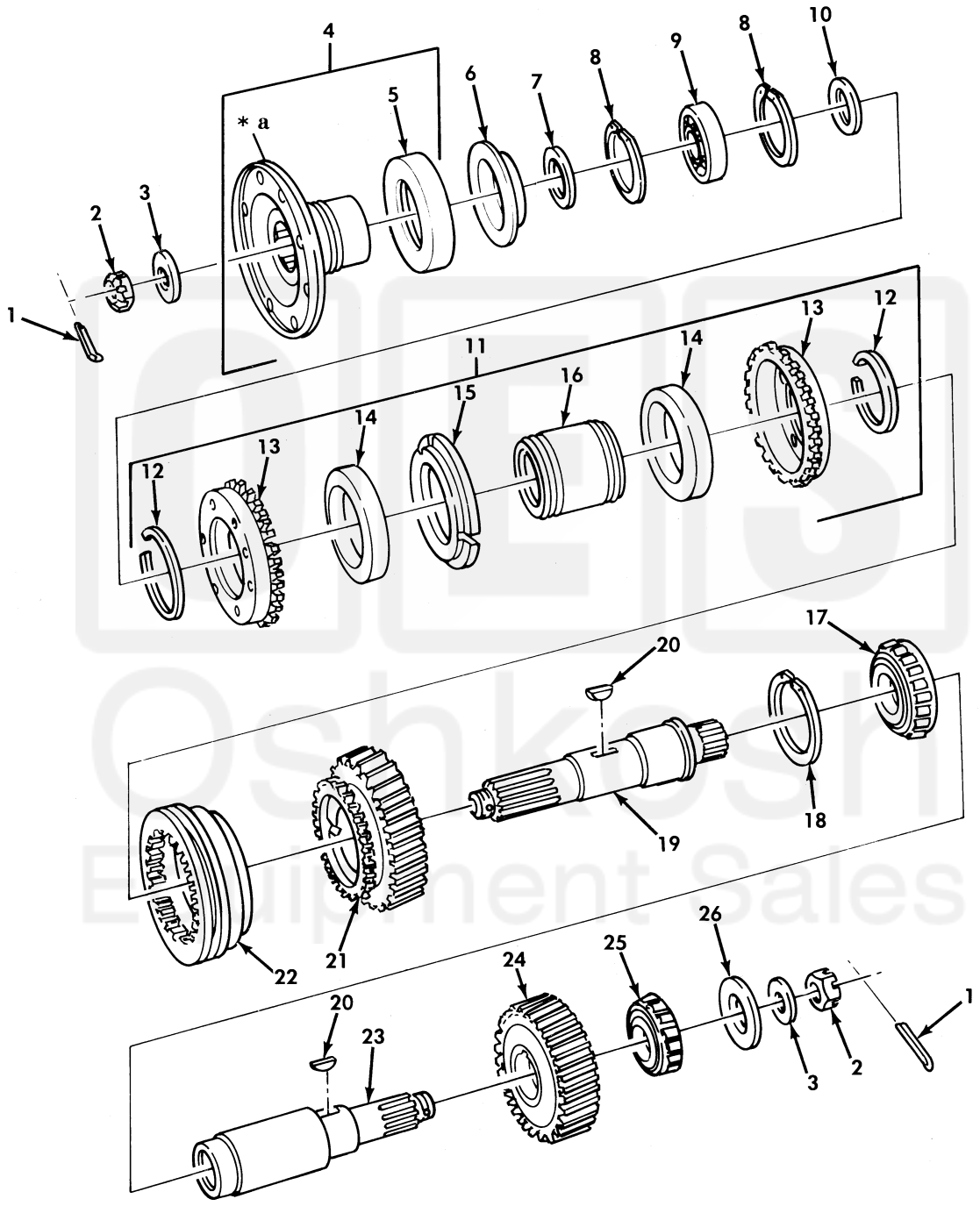

*** a PART OF ITEM 4**

Figure 145. Transfer Output Shafts and Bearings.

Current part is item (21) on diagram. Available at www.oshkoshequipment.com

Current part is item (21) on diagram. Available at www.oshkoshequipment.com

(1) ITEM NO	(2) SMR CODE	(3) NSN	(4) CAGEC	(5) PART NUMBER	(6) DESCRIPTION AND USABLE ON CODE (UOC)	(7) QTY
					GROUP 0801 POWER TRANSFER AND FINAL DRIVE ASSEMBLIES	
					FIG. 145 TRANSFER OUTPUT SHAFTS AND BEARING	
1	PAFZZ	5315-00-059-0184	96906	MS24665-361	PIN,COTTER.....	2
2	PAFZZ	5310-00-492-9631	76040	A143813	NUT,PLAIN,SLOTTED,H.....	2
3	PAFZZ	5310-00-188-4199	76894	15235	WASHER,FLAT.....	2
4	PAFZZ	2520-00-734-6802	78500	5WCS32-37A	FLANGE,COMPANION,VE.....	1
5	PAFZZ	2520-00-563-8309	78500	2847Z312	.DEFLECTOR,DIRT AND.....	1
6	PAFZZ	4910-01-313-4621	19207	99293	REPAIR KIT,SLEEVE.....	1
7	PAHZZ	5365-00-737-6622	19207	7376622	SPACER,RING.....	1
8	PAHZZ	5325-00-737-5288	19207	7375288	RING,RETAINING.....	2
9	PAHZZ	3110-00-555-5238	00501	E1ADDN7025A	BEARING,BALL,ANNULA.....	1
10	PAHZZ	5365-00-033-6009	19207	7375260	SPACER,RING.....	1
11	PAHZZ	2520-00-741-7951	19207	7417951	CLUTCH ASSEMBLY,FRI.....	1
12	PAHZZ	5325-00-311-7683	19207	8758290	.RING,RETAINING.....	2
13	PAHZZ	5310-00-737-2590	19207	7372590	.NUT,SHEET SPRING.....	2
14	PAHZZ	2520-00-563-5521	78500	A1898L558	.CLUTCH,POSITIVE,VEH.....	2
15	PAHZZ	5310-00-737-5257	19207	7375257	.WASHER TRANSFER CAS.....	1
16	PAHZZ	3120-00-394-3021	19207	7375255	.BUSHING,SLEEVE.....	1
17	PAHZZ	3110-00-195-0456	96906	MS19081-260	BEARING,ROLLER,TAPE.....	1
18	PAHZZ	5325-00-737-5287	19207	7375287	RING,RETAINING.....	1
19	PAHZZ	2520-00-734-6771	19207	7346771	PROPELLER SHAFT.....	1
20	PAHZZ	5315-00-850-7038	96906	MS35756-105	KEY,WOODRUFF.....	2
21	PAHZZ	3020-00-734-6764	19207	7346764	GEAR CLUSTER.....	1
22	PAHZZ	3020-00-734-6769	19207	7346769	COLLAR TRANSFER CAS.....	1
23	PAHZZ	3040-00-301-7741	19207	8332554	SHAFT,SHOULDERED.....	1
24	PAHZZ	3020-00-734-6768	19207	7346768	GEAR,HELICAL.....	1
25	PAHZZ	3110-00-275-0248	96906	MS19081-88	BEARING,ROLLER,TAPE.....	1
26	PAHZZ	5365-00-737-5258	19207	7375258	SPACER,SLEEVE.....	1

END OF FIGURE

Current part is item (21) on diagram. Available at www.oshkoshequipment.com